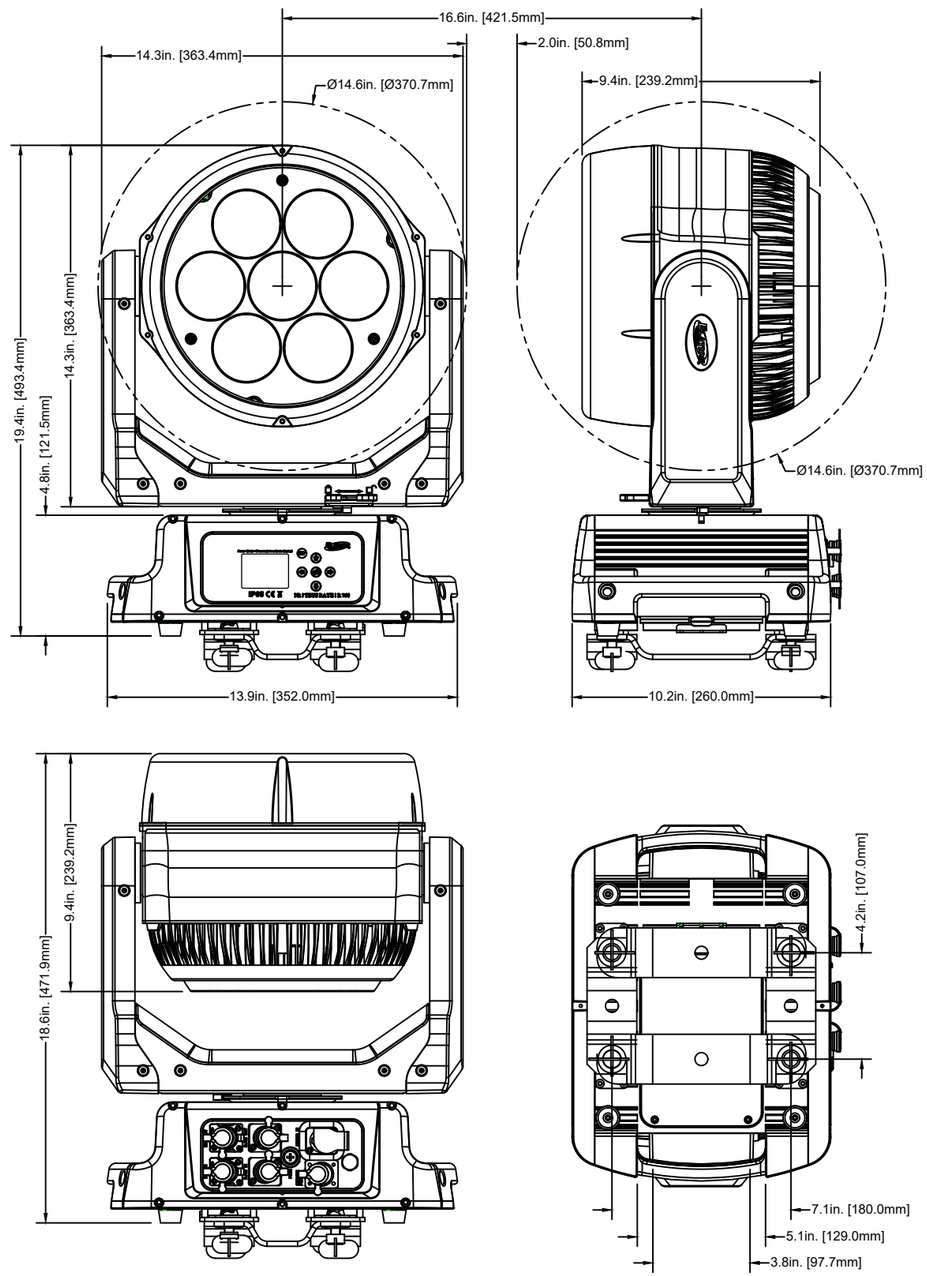

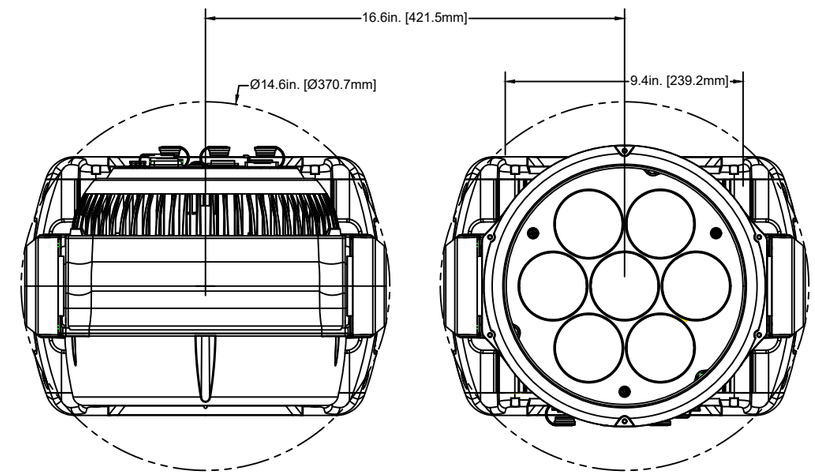

TITLE:				DATE:
PROTEUS RAYZOR 760				230626
SCALE:	TOL:	.XX(.X)	.XXX(.XX)	ANGLE:
NONE	±	-	-	-