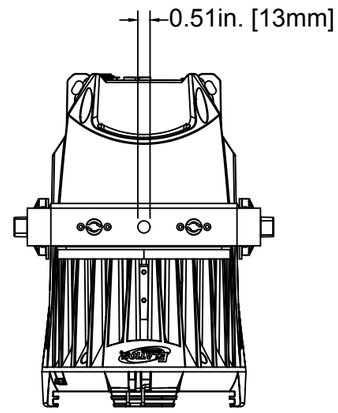

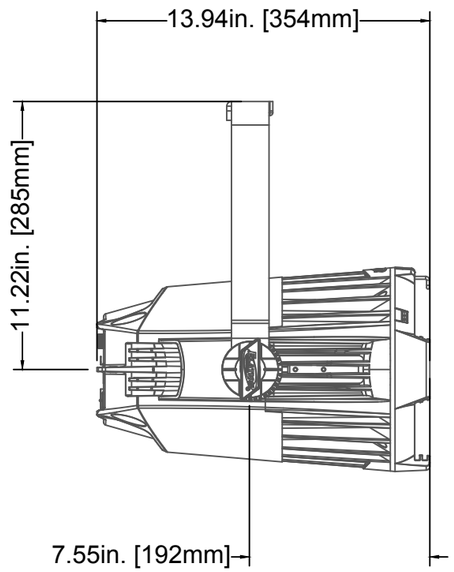

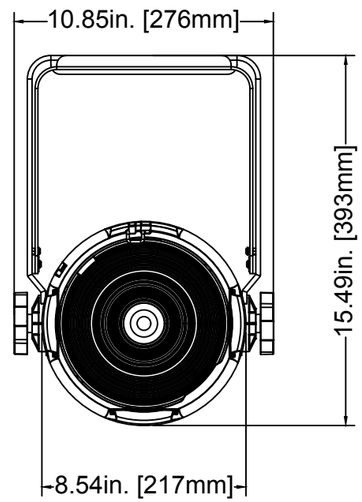

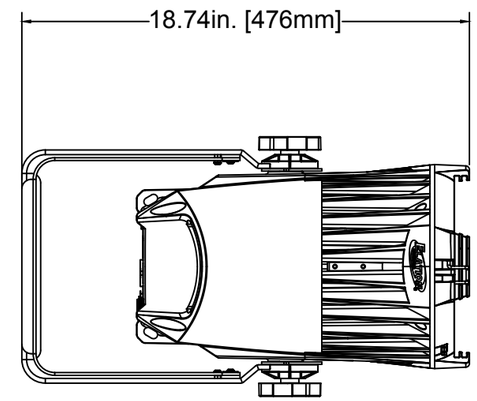

TITLE:				DATE:
ELATION KL PAR FC				26-JUL-2021
SCALE:	TOL:	.XX(.X)	.XXX(.XX)	ANGLE:
NONE	±	-	-	-