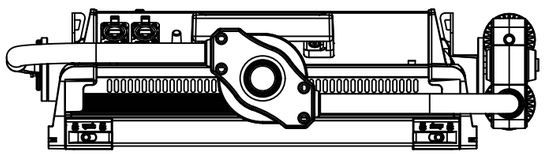

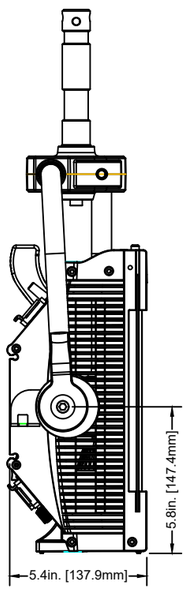

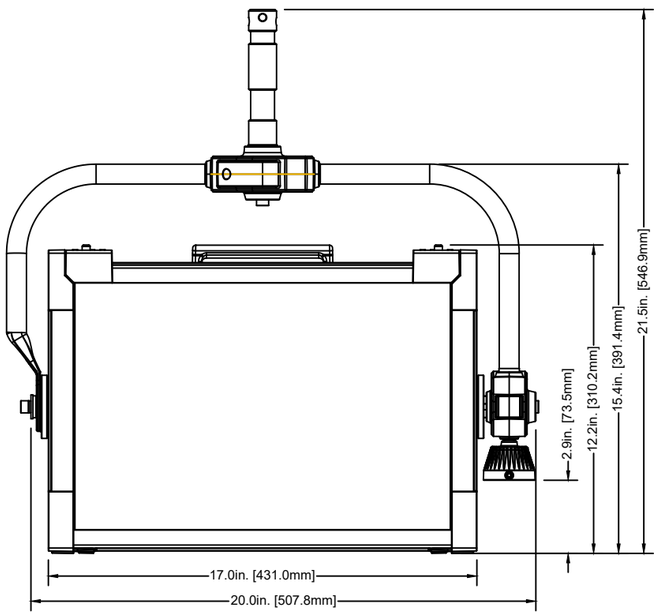

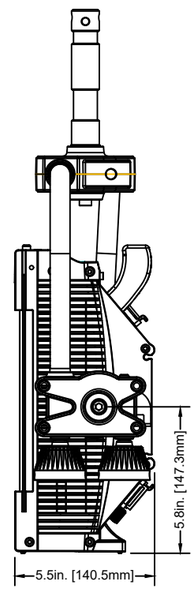

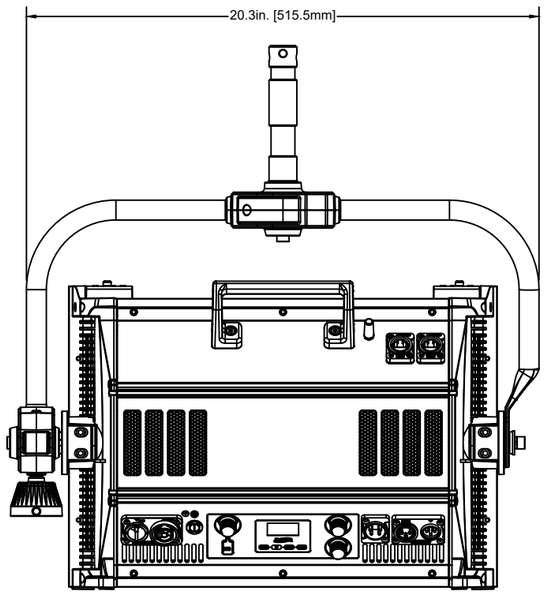

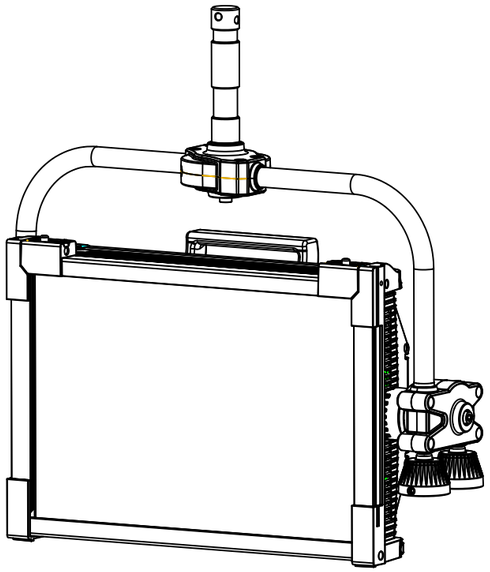

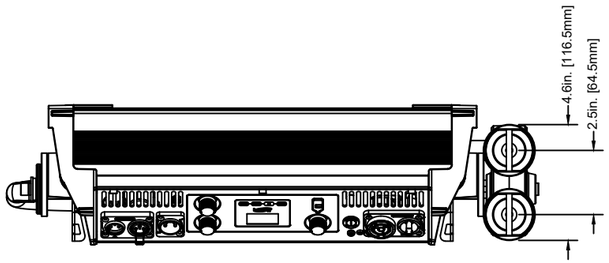

TITLE:				DATE:
ELATION KL PANEL PO BRACKET				210615
SCALE:	TOL:	.XX(.X)	.XXX(.XX)	ANGLE:
NONE	±	-	-	-