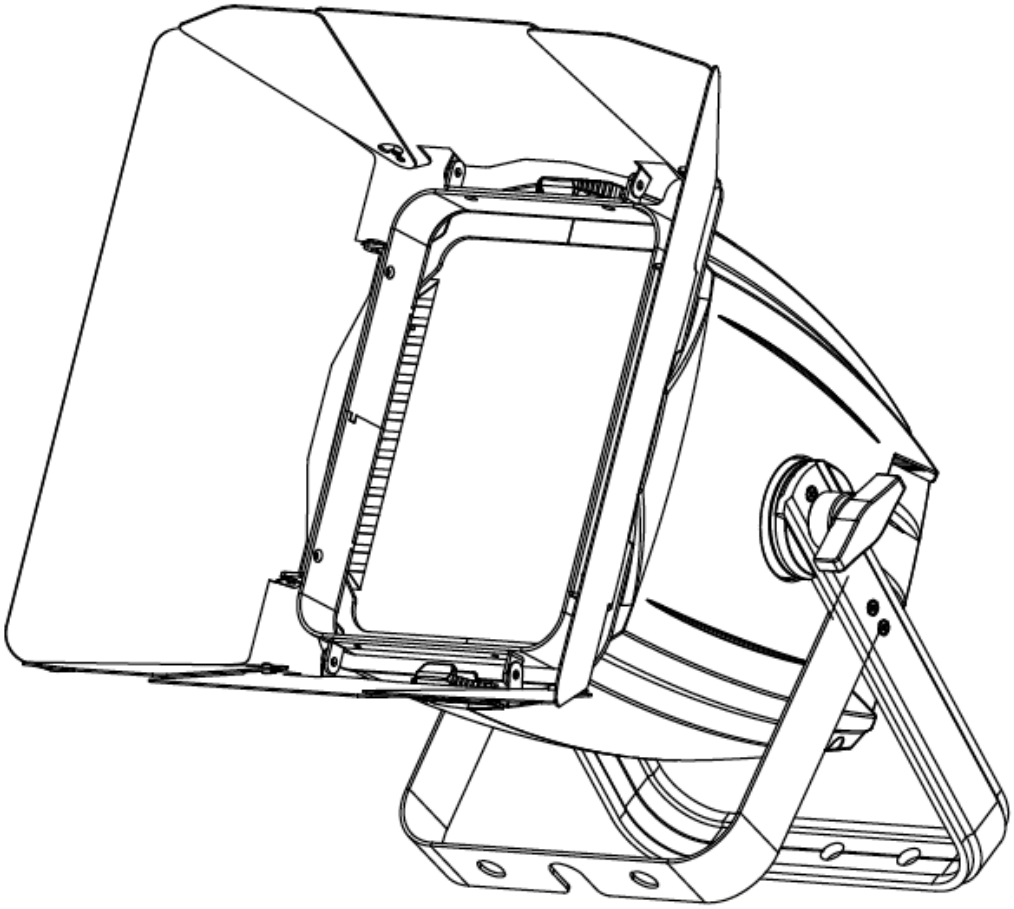

TVL CYC RGBW™

user manual

©2016 ELATION PROFESSIONAL all rights reserved. Information, specifications, diagrams, images, and instructions herein are subject to change without notice. ELATION PROFESSIONAL logo and identifying product names and numbers herein are trademarks of ELATION PROFESSIONAL. Copyright protection claimed includes all forms and matters of copyrightable materials and information now allowed by statutory or judicial law or hereinafter granted. Product names used in this document may be trademarks or registered trademarks of their respective companies and are hereby acknowledged. All non-ELATION brands and product names are trademarks or registered trademarks of their respective companies.

ELATION PROFESSIONAL and all affiliated companies hereby disclaim any and all liabilities for property, equipment, building, and electrical damages, injuries to any persons, and direct or indirect economic loss associated with the use or reliance of any information contained within this document, and/or as a result of the improper, unsafe, insufficient and negligent assembly, installation, rigging, and operation of this product.

Elation Professional USA | 6122 S. Eastern Ave. | Los Angeles, CA. 90040

323-582-3322 | 323-832-9142 fax | www.elationlighting.com | info@elationlighting.com

Elation Professional B.V. | Junostraat 2 | 6468 EW Kerkrade, The Netherlands

+31 45 546 85 66 | +31 45 546 85 96 fax | www.elationlighting.eu | info@elationlighting.eu

DOCUMENT VERSION

Please check www.elationlighting.com **for the latest revision/update of this manual.**

Date	Document Version	Software Version ≥	DMX Channel Modes	Notes
6/1/16	1	1.1	4 / 6 / 7 / 8 / 10 / 14	Initial release.
7/7/16	2	1.2	4 / 6 / 7 / 8 / 10 / 14	Updated Color Temperature DMX Values (0=OFF)
6/9/17	3	1.4	N/C	Updated system menu added Frequency, Gamma, Color Chase, and removed Auto Test, updated dimensional drawing and connection specs.

CONTENTS

General Information	4
Warranty	6
Safety Instructions	7
General Guidelines	8
Fixture Overview	9
Barn Door Installation	10
Fixture Installation	11
Fixture Menu	14
DMX Channel Functions And Values	17
Cleaning and Maintenance	20
Technical Specifications	21
Optional Accessories	23

GENERAL INFORMATION

INTRODUCTION

Congratulations, you have just purchased one of the most innovative and reliable lighting fixtures on the market today! This fixture has been designed to perform reliably for years when the guidelines in this booklet are followed. Please read and understand the instructions in this manual carefully and thoroughly before attempting to operate this unit. These instructions contain important information regarding safety during use and maintenance.

UNPACKING

Every fixture has been thoroughly tested and has been shipped in perfect operating condition. Carefully check the shipping carton for damage that may have occurred during shipping. If the carton appears to be damaged, carefully inspect your unit for damage and be sure all accessories necessary to operate the unit have arrived intact. In the event damage has been found or parts are missing, please contact our customer support team for further instructions. Please do not return this unit to your dealer without first contacting customer support at the number listed below. Please do not discard the shipping carton in the trash. Please recycle whenever possible.

BOX CONTENTS

- (1) Locking Power Cable
- (1) Barn Door
- (1) Duel Yoke Bracket (2x Handle Bolts)

CUSTOMER SUPPORT

Elation Professional® provides a customer support line, to provide set up help and to answer any question should you encounter problems during your set up or initial operation. You may also visit us on the web at www.elationlighting.com for any comments or suggestions. For service related issue please contact Elation Professional®.

ELATION SERVICE USA - Monday - Friday 8:00am to 5:00pm PST

Voice: 323-582-3322 **Fax: 323-832-9142**

E-mail: support@elationlighting.com

ELATION SERVICE EUROPE - Monday - Friday 08:30 to 17:00 CET

Voice: +31 45 546 85 30 **Fax: +31 45 546 85 96**

E-mail: support@elationlighting.eu

WARRANTY REGISTRATION

Please complete and mail in the enclosed warranty card or register online: http://www.elationlighting.com/Login.aspx to validate your purchase. All returned service items whether under warranty or not, must be freight pre-paid and accompany a return authorization (R.A.) number. The R.A. number must be clearly written on the outside of the return package. A brief description of the problem as well as the R.A. number must also be written down on a piece of paper and included in the shipping container. If the unit is under warranty, you must provide a copy of your proof of purchase invoice. Items returned without a R.A. number clearly marked on the outside of the package will be refused and returned at customer's expense. You may obtain a R.A. number by contacting customer support at 323-582-3322.

IMPORTANT NOTICE!

There are no user serviceable parts inside this unit. Do not attempt any repairs yourself; doing so will void your manufactures warranty. Damages resulting from modifications to this fixture and/or the disregard of safety and general user instructions found in this user manual void the manufactures warranty and are not subject to any warranty claims and/or repairs.

LIMITED WARRANTY

A. Elation Professional® hereby warrants, to the original purchaser, Elation Professional® products to be free of manufacturing defects in material and workmanship for a period of two years (730 days), and Elation Professional® product rechargeable batteries to be free of manufacturing defects in material and workmanship for a period of six months (180 days), from the original date of purchase. This warranty excludes discharge lamps and all product accessories. This warranty shall be valid only if the product is purchased within the United States of America, including possessions and territories. It is the owner's responsibility to establish the date and place of purchase by acceptable evidence, at the time service is sought.

B. For warranty service, send the product only to the Elation Professional® factory. All shipping charges must be pre-paid. If the requested repairs or service (including parts replacement) are within the terms of this warranty, Elation Professional® will pay return shipping charges only to a designated point within the United States. If any product is sent, it must be shipped in its original package and packaging material. No accessories should be shipped with the product. If any accessories are shipped with the product, Elation Professional® shall have no liability what so ever for loss and/or or damage to any such accessories, nor for the safe return thereof.

C. This warranty is void if the product serial number and/or labels are altered or removed; if the product is modified in any manner which Elation Professional® concludes, after inspection, affects the reliability of the product; if the product has been repaired or serviced by anyone other than the Elation Professional® factory unless prior written authorization was issued to purchaser by Elation Professional®; if the product is damaged because not properly maintained as set forth in the product instructions, guidelines and/or user manual.

D. This is not a service contract, and this warranty does not include any maintenance, cleaning or periodic check-up. During the periods as specified above, Elation Professional® will replace defective parts at its expense, and will absorb all expenses for warranty service and repair labor by reason of defects in material or workmanship. The sole responsibility of Elation Professional® under this warranty shall be limited to the repair of the product, or replacement thereof, including parts, at the sole discretion of Elation Professional®. All products covered by this warranty were manufactured after January 1, 1990, and bare identifying marks to that effect.

E. Elation Professional® reserves the right to make changes in design and/or performance improvements upon its products without any obligation to include these changes in any products theretofore manufactured.

F. No warranty, whether expressed or implied, is given or made with respect to any accessory supplied with the products described above. Except to the extent prohibited by applicable law, all implied warranties made by Elation Professional® in connection with this product, including warranties of merchantability or fitness, are limited in duration to the warranty periods set forth above. And no warranties, whether expressed or implied, including warranties of merchantability or fitness, shall apply to this product after said periods have expired. The consumer's and/or dealer's sole remedy shall be such repair or replacement as is expressly provided above; and under no circumstances shall Elation Professional® be liable for any loss and/or damage, direct and/or consequential, arising out of the use of, and/or the inability to use, this product.

G. This warranty is the only written warranty applicable to Elation Professional® products and supersedes all prior warranties and written descriptions of warranty terms and conditions heretofore published.

SAFETY INSTRUCTIONS

This fixture is an extremely sophisticated piece of electronic equipment. To guarantee a smooth operation, it is important to follow the guidelines in this manual. The manufacturer of this device will not accept responsibility for damages resulting from the misuse of this fixture due to the disregard of the information printed in this manual.

This device falls under **PROTECTION CLASS 1**. It's essential this device be grounded properly. Only qualified personnel should perform all electrical connections.

KEEP DRY

INDOORS USE ONLY!

DO NOT EXPOSE FIXTURE RAIN AND MOISTURE!

UNPLUG POWER BEFORE SERVICING FIXTURE!

DO NOT PLUG FIXTURE INTO A DIMMER PACK!

NEVER TOUCH FIXTURE DURING OPERATION, AS IT MAY BE HOT!

NEVER LOOK DIRECTLY INTO THE LIGHT SOURCE!

SENSITIVE PERSONS MAY SUFFER AN EPILEPTIC SHOCK!

- For proper operation, follow the **Installation** guidelines described in this manual. Only qualified and certified personnel should perform installation of this fixture and only the original rigging parts (brackets) included with this fixture should be used for installation. Any modifications will void the original manufactures warranty and increase the risk of damage and/or personal injury.
- Never look directly into the light source of this fixture to prevent risk of injury to your retina, which may induce blindness. Those suffering from **EPILEPSY** should avoid looking directly into the light source of this unit at all times.
- The fan and air inlets must remain clean and never blocked. Allow approx. 6" (15cm) between this fixture and other devices or a wall for proper cooling.
- Always disconnect from main power source before performing any type of service and/or cleaning procedure. Only handle the power cord by the plug end, never pull out the plug by tugging the wire portion of the cord.
- Do not operate this fixture if the power cord has become frayed, crimped and/or damaged. If the power cord is damaged, replace it immediately with a new one of similar power rating.

GENERAL GUIDELINES

- **NEVER OPEN THIS FIXTURE WHILE IN USE!**
- During the initial operation of this fixture, a light smoke or smell may emit from the interior of the fixture. This is a normal process and is caused by excess paint in the interior of the casing burning off from the heat associated with the lamp and will decrease gradually over time.
- This fixture is a professional lighting effect designed for **INDOOR** / **DRY LOCATIONS ONLY** on stage, in nightclubs, theatres, etc.
- Please make sure there are **NO FLAMMABLE MATERIALS** close to the fixture while operating, to prevent any fire hazard.
- **Maximum** temp of the external surface **185°F (85°C)**.
- The fixture must be installed in a location with adequate ventilation, at least **0.6" (15cm)** from adjacent surfaces. Be sure no air ventilation slots are blocked.
- **DO NOT** attempt installation and/or operation without knowledge how to do so.
- **DO NOT** permit operation by persons who are not qualified to operate this type of fixture. Most damages are the result of operations by nonprofessionals.
- Consistent operational breaks may ensure the fixture will function properly for many years to come.
- **DO NOT** shake fixture, avoid brute force when installing and/or operating fixture.
- Always install the fixture with an appropriate safety cable. When installing the fixture in a suspended environment, always use mounting hardware that is no less than M10 x 25 mm, also be sure the hardware is insert in the pre-arranged screw holes in the bracket of the fixture.
- Use the original packaging and materials to transport the fixture in for service.
- **DO NOT TOUCH** the housing bare-hand during its operation. Turn OFF the power and allow approximately 15 minutes for the fixture to cool down before replacing or serving.

LED LIFE

The average LED Life (hours) may vary depending on several factors including but not limited to: Environmental Conditions, Power/Voltage, Usage Patterns (On-Off Cycling), Control and Dimming.

FIXTURE OVERVIEW

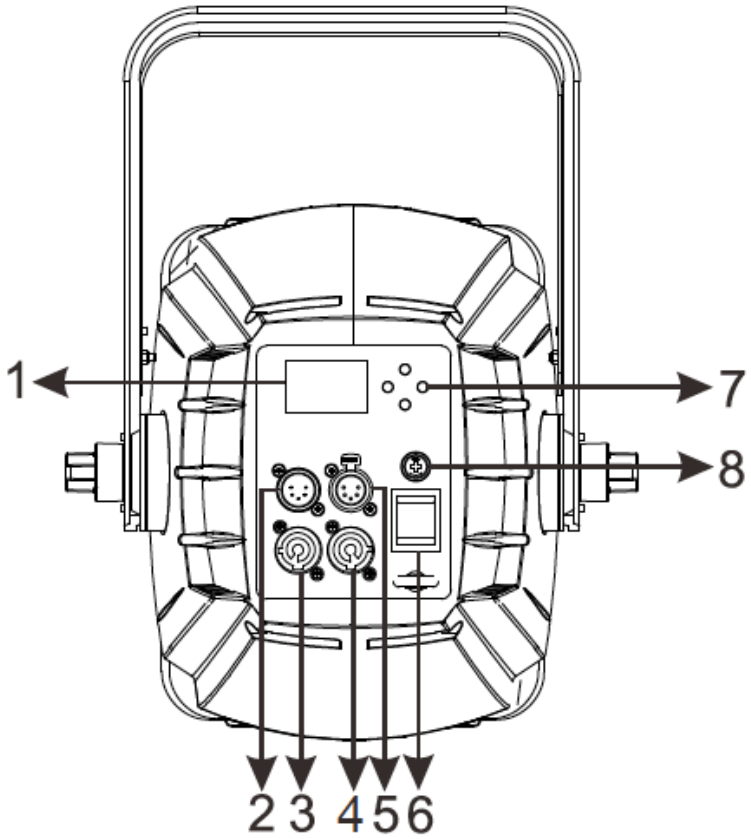

1. **LCD Menu Function Display**
2. **5pin DMX IN**
3. **power IN**
4. **power OUT**
5. **5pin DMX OUT**
6. **Power Switch**
7. **MENU, UP, DOWN, ENTER Buttons**
8. **FUSE (T3.15A)**

BARN DOOR INSTALLATION

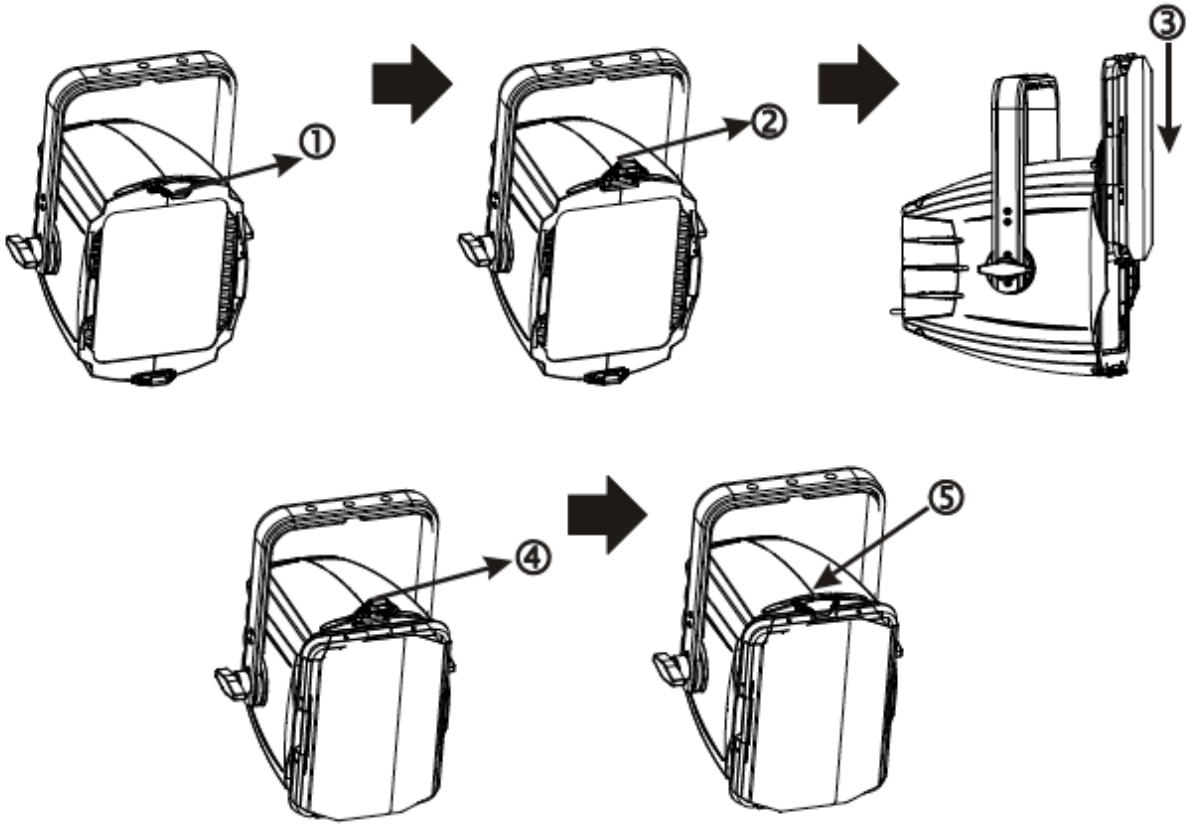

1. Push locking tab towards the RIGHT.

2. Then flip locking tab UP to unlock.

3. Insert Barn Door into the outside slot of the fixture and push into place.

4. Push locking tab towards the RIGHT.

5. Then flip locking tab DOWN to secure barn door into place.
   Make sure the barn door is completely secured under locking tab.

FIXTURE INSTALLATION

FLAMMABLE MATERIAL WARNING

Keep fixture at least 5.0 ft (1.5m) away from any flammable materials, decorations, pyrotechnics, etc.

ELECTRICAL CONNECTIONS

A qualified electrician should be used for all electrical connections and/or installations.

CAUTIONS

- For added protection, mount the fixture in areas outside walking paths, seating areas, or in areas were unauthorized personnel might reach the fixture.
- Maximum ambient operating temperature for this fixture is **104°F. (40°C)** Do not use the fixture under or above this temperature.
- Maximum temperature of the external surface **185°F (85°C)**.
- Before mounting the fixture to any surface, make sure the installation area can hold a minimum point load of **10 times** the weight of the fixture.
- Fixture installation must always be secured with a secondary safety attachment, such as an appropriate safety cable.
- Never stand directly below the device when mounting, removing or servicing.

POWER LINKING

Max number of units that can be power linked is **9 units @120V** / **17 units @230V**.

MOUNTING POINTS

Overhead mounting requires extensive experience, including amongst others calculating working load limits, installation material being used, and periodic safety inspection of all installation material and the device. If you lack these qualifications, do not attempt the installation yourself. Improper installation can result in bodily injury. Fixture is fully operational in the specific mounting positions as illustrated below.

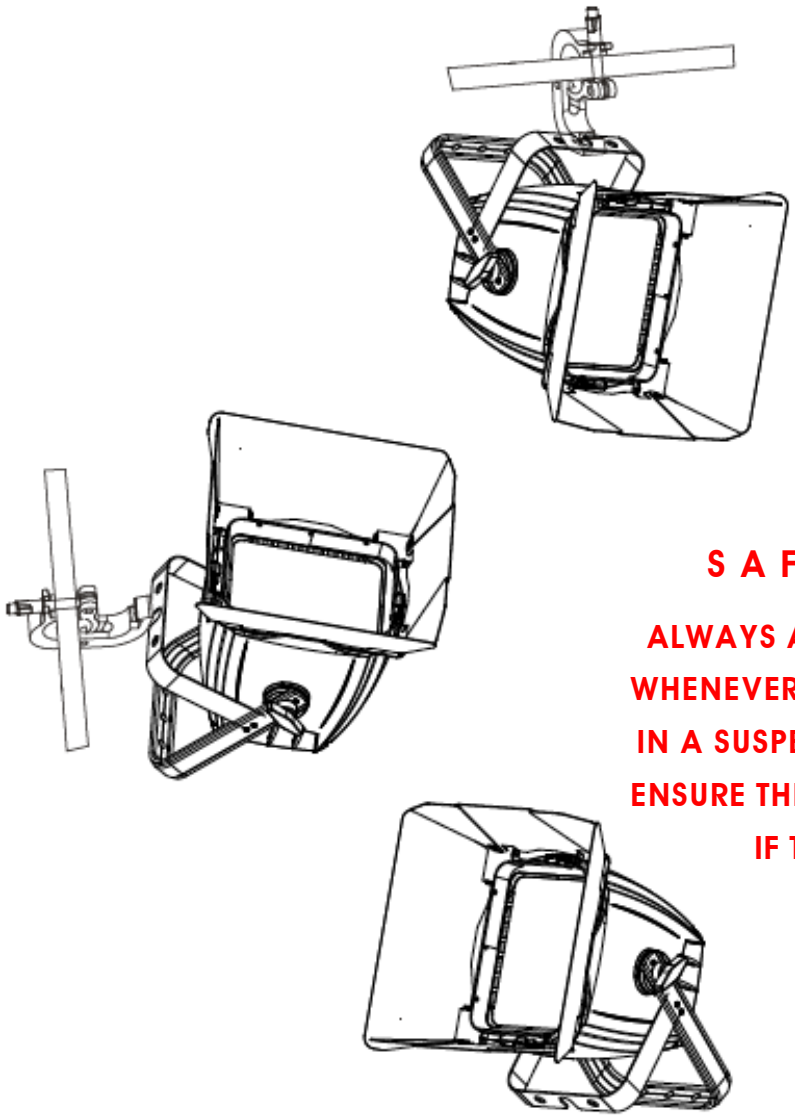

SAFETY CABLE

ALWAYS ATTACH A SAFETY CABLE WHENEVER INSTALLING THIS FIXTURE IN A SUSPENDED ENVIRONMENT TO ENSURE THE FIXTURE WILL NOT DROP IF THE CLAMP FAILS.

CLAMP MOUNTING

The fixture includes an adjustable mounting yoke that attaches to both sides of the fixture. When mounting this fixture to truss be sure to secure an appropriately rated clamp to the mounting yoke using a M10 screw fitted through the center hole of the mounting yoke. Be sure to attach a **Safety Cable** (not included) to the fixture using the safety cable rigging point on the back of the fixture as illustrated below.

SECURING

Regardless of the rigging option you choose for your fixture, always be sure to secure your fixture with a safety cable. The fixture provides a built-in rigging point for a safety cable on the back of the fixture as illustrated below. Be sure to only use the designated rigging point for the safety cable.

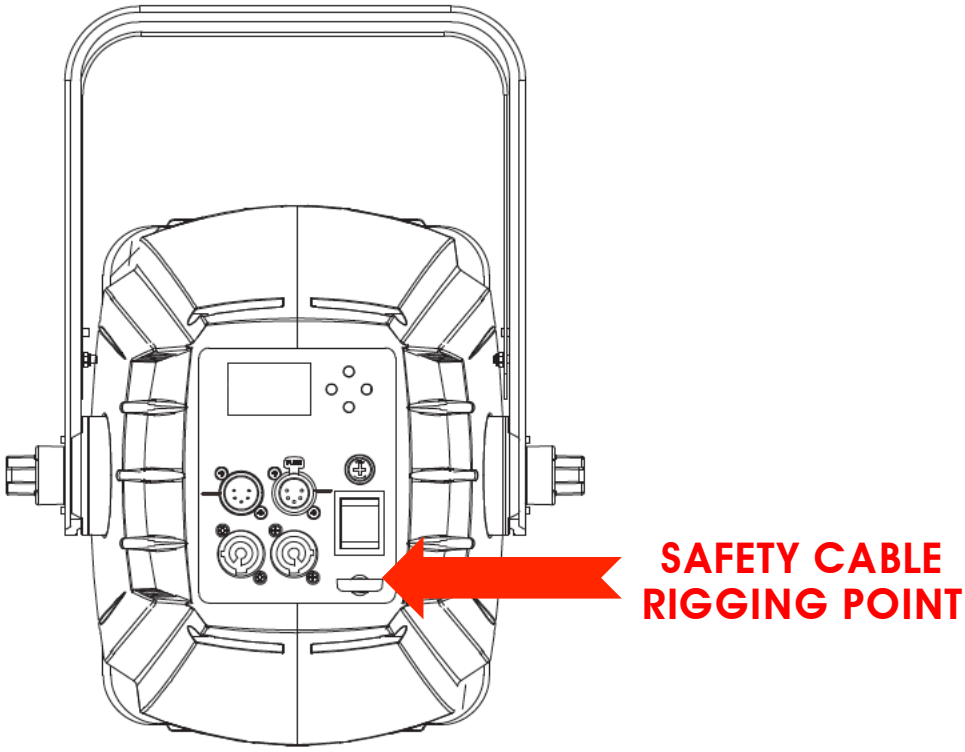

FIXTURE MENU

ON-BOARD SYSTEM MENU

The fixture comes with an easy to navigate system menu. The next section will detail the functions of each command in the system menu.

LCD MENU CONTROL PANEL

The control panel (see image below) located on back of the fixture allows you to access the main menu and make all necessary adjustments to the fixture**.** During normal operation, pressing **MENU** button once will access the fixture's main menu. Once in the main menu you can navigate through the different functions and access the sub-menus with the **UP** and **DOWN** buttons. Once you reach a field that requires adjusting, press the **ENTER** button to activate that field and use the **UP** and **DOWN** buttons to adjust the field. Pressing the **ENTER** button once more will confirm your setting. You may exit the main menu at any time without making any adjustments by pressing and holding the **MENU** button for 3 seconds.

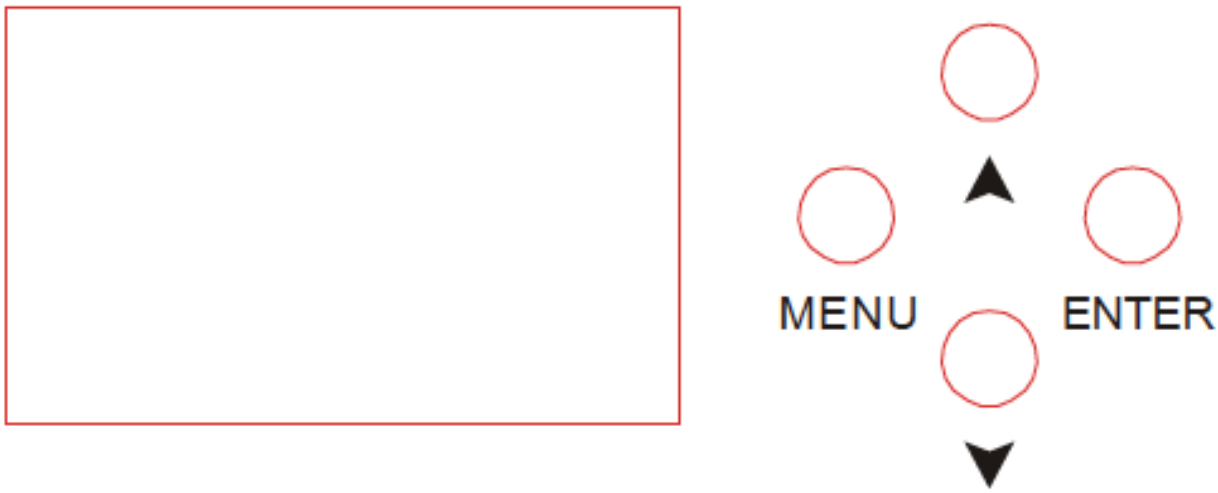

The MENU display will lock when NO buttons are pressed for 30 seconds. When the display locks, none of the control panel buttons will respond. To unlock the display, press and hold the MENU button 3 seconds to access the menu options once again

ELATION© TVL CYC RGBW™ SYSTEM MENU				
Supports Software Versions: ≥1.2				
Features subject to change without any prior written notice.				
MAIN MENU	**SUB MENU**	**OPTIONS / VALUES (Default Settings in BOLD)**		**DESCRIPTION**
DMX Functions	DMX Address	**001** - 512		Set DMX Address Setting
	Channel Mode	**Mode1(4ch)**, Mode2(6ch), Mode3(7ch) Mode4(8ch), Mode5(10ch), Mode6(14ch)		Select DMX Channel Mode
	View DMX Value	1. Red	xxx	Displays Current Manual DMX Values
		2. Red Fine	xxx	
		3. Green	xxx	
		4. Green Fine	xxx	
		5. Blue	xxx	
		6. Blue Fine	xxx	
		7. White	xxx	
		8. White Fine	xxx	
		9. Color-Macros	xxx	
		10. Strobe	xxx	
		11. Dimmer	xxx	
		12. Dimmer Fine	xxx	
		13. Color-Temp	xxx	
		14. Dimmer Mode	xxx	
	DMX Last State	**Last State**, Blackout		
Dimmer Curve		Standard, Stage, TV, Architectural, Theatre		Set Dimming Curve
White Balance		Red	125-**255**	Adjust White Balance Setting
		Green	125-**255**	
		Blue	125-**255**	
		White	125-**255**	
Display Setting	Invert Display	**No**, Yes		Flip LCD Control Display 180°
	Backlight Auto Off	**No**, Yes		Set LCD Display Backlight
	Contrast Ratio	**15** (0 - 30)		Adjust LCD Control Display Contrast Level
	Unit Temperature	**F°**, C°		Select Temperature Mode
Auto Test				Run Fixture Auto Test Function
Manual Control		Red	**0** - 255	Control DMX Values Manually
		Red Fine	**0** - 255	
		Green	**0** - 255	
		Green Fine	**0** - 255	
		Blue	**0** - 255	
		Blue Fine	**0** - 255	
		White	**0** - 255	
		White Fine	**0** - 255	
		Color-Macros	**0** - 255	
		Strobe	**0** - 255	
		Dimmer	**0** - 255	
		Dimmer Fine	**0** - 255	
		Color-Temp	**0** - 255	
		Dimmer Mode	**0** - 255	
Fixture Information	Fixture use time	0 (hours)		Fixture Information
	Led Temp	00 (F°/ C°)		
	Firmware Version	≥ 1.2		
Factory Setting		**No**, Yes		Reset to factory default settings

SYSTEM MENU CHANGE WITH SOFTWARE UPDATE VERSION 1.4

See highlighted menu items below which have been updated with this software update.

Supports Software Versions: ≥1.4				
Features subject to change without any prior written notice.				
MAIN MENU	**SUB MENU**	**OPTIONS / VALUES (Default Settings in BOLD)**		**DESCRIPTION**
DMX Functions	DMX Address	**001** - 512		Set DMX Address Setting
	Channel Mode	**Mode1(4ch)**, Mode2(6ch), Mode3(7ch) Mode4(8ch), Mode5(10ch), Mode6(14ch)		Select DMX Channel Mode
	View DMX Value	1. Red	xxx	Displays Current Manual DMX Values
		2. Red Fine	xxx	
		3. Green	xxx	
		4. Green Fine	xxx	
		5. Blue	xxx	
		6. Blue Fine	xxx	
		7. White	xxx	
		8. White Fine	xxx	
		9. Color-Macros	xxx	
		10. Strobe	xxx	
		11. Dimmer	xxx	
		12. Dimmer Fine	xxx	
		13. Color-Temp	xxx	
		14. Dimmer Mode	xxx	
	DMX Last State	**Last State**, Blackout		
Dimmer Curve		Standard, Stage, TV, Architectural, Theatre		Set Dimming Curve
White Balance		Red	125-**255**	Adjust White Balance Setting
		Green	125-**255**	
		Blue	125-**255**	
		White	125-**255**	
Display Setting	Invert Display	**No**, Yes		Flip LCD Control Display 180°
	Backlight Auto Off	**No**, Yes		Set LCD Display Backlight
	Contrast Ratio	**15** (0 - 30)		Adjust LCD Control Display Contrast Level
	Unit Temperature	**F°**, C°		Select Temperature Mode
Frequency		**900Hz**, 1000, 1200, 1300, 1400, 1500, 2500, 40000, 50000, 100000, 150000, 200000, 250000		Set LED Refresh Rate
Gamma		**NO**, 2.0, 2.2, 2.4, 2.8		Set LED Gamma Brightness
Color Chase		Fast, Fade		Set Color Chase Speed
Manual Control		Red	**0** - 255	Control DMX Values Manually
		Red Fine	**0** - 255	
		Green	**0** - 255	
		Green Fine	**0** - 255	
		Blue	**0** - 255	
		Blue Fine	**0** - 255	
		White	**0** - 255	
		White Fine	**0** - 255	
		Color-Macros	**0** - 255	
		Strobe	**0** - 255	
		Dimmer	**0** - 255	
		Dimmer Fine	**0** - 255	
		Color-Temp	**0** - 255	
		Dimmer Mode	0 - **255**	
Fixture Information	Fixture use time	0 (hours)		Fixture Information
	Led Temp	00 (F°/ C°)		
	Firmware Version	≥ 1.4		
Factory Setting		**No**, Yes		Reset to factory default settings

DMX CHANNEL FUNCTIONS AND VALUES

ELATION© TVL CYC RGBW™ DMX Channel Values / Functions (14 DMX Channels)							
Supports Software Versions: ≥ 1.2							
Features subject to change without any prior written notice.							
MODE / CHANNEL						**VALUE**	**FUNCTION**
4	**6**	**7**	**8**	**10**	**14**		
1	1	1	1	1	1		RED
						0-255	Red (0-Black , 255-100% Red)
					2		RED FINE
						0-255	Red FINE Adjustment
2	2	2	2	2	3		GREEN
						0-255	Green (0-Black , 255-100% Green)
					4		GREEN FINE
						0-255	Green FINE Adjustment
3	3	3	3	3	5		BLUE
						0-255	Blue (0-Black , 255-100% Blue)
					6		BLUE FINE
						0-255	Blue FINE Adjustment
4	4	4	4	4	7		WHITE
						0-255	White (0-Black , 255-100% White)
					8		WHITE FINE
						0-255	White FINE Adjustment

ELATION© TVL CYC RGBW™ DMX Channel Values / Functions (14 DMX Channels)							
Supports Software Versions: ≥ 1.2							
Features subject to change without any prior written notice.							
MODE / CHANNEL						**VALUE**	**FUNCTION**
4	**6**	**7**	**8**	**10**	**14**		
							COLOR MACROS
						0-4	Preset Color 1
						5-8	Preset Color 2
						9-12	Preset Color 3
						13-16	Preset Color 4
						17-20	Preset Color 5
						21-24	Preset Color 6
						25-28	Preset Color 7
						29-32	Preset Color 8
						33-36	Preset Color 9
						37-40	Preset Color 10
						41-44	Preset Color 11
						45-48	Preset Color 12
						49-52	Preset Color 13
						53-56	Preset Color 14
						57-60	Preset Color 15
						61-64	Preset Color 16
						65-68	Preset Color 17
						69-72	Preset Color 18
						73-76	Preset Color 19
				5	9	77-80	Preset Color 20
						81-84	Preset Color 21
						85-88	Preset Color 22
						89-92	Preset Color 23
						93-96	Preset Color 24
						97-100	Preset Color 25
						101-104	Preset Color 26
						105-108	Preset Color 27
						109-112	Preset Color 28
						113-116	Preset Color 29
						117-120	Preset Color 30
						121-124	Preset Color 31
						125-128	Preset Color 32
						129-132	Preset Color 33
						133-136	Preset Color 34
						137-140	Preset Color 35
						141-144	Preset Color 36
						145-148	Preset Color 37
						149-152	Preset Color 38
						153-156	Preset Color 39
						157-160	Preset Color 40

ELATION© TVL CYC RGBW™ DMX Channel Values / Functions (14 DMX Channels)							
Supports Software Versions: ≥ 1.2							
Features subject to change without any prior written notice.							
MODE / CHANNEL						**VALUE**	**FUNCTION**
4	**6**	**7**	**8**	**10**	**14**		
							COLOR MACROS - Continued
						161-164	Preset Color 41
						165-168	Preset Color 42
						169-172	Preset Color 43
						173-176	Preset Color 44
						177-180	Preset Color 45
						181-184	Preset Color 46
						185-188	Preset Color 47
						189-192	Preset Color 48
						193-196	Preset Color 49
						197-200	Preset Color 50
						201-204	Preset Color 51
				5	9	205-208	Preset Color 52
						209-212	Preset Color 53
						213-216	Preset Color 54
						217-220	Preset Color 55
						221-224	Preset Color 56
						225-228	Preset Color 57
						229-232	Preset Color 58
						233-236	Preset Color 59
						237-240	Preset Color 60
						241-244	Preset Color 61
						245-248	Preset Color 62
						249-252	Preset Color 63
						253-255	Preset Color 64
							SHUTTER / STROBE
						0-31	LEDs OFF
						32-63	LEDs ON
						64-95	Strobe Effect SLOW to FAST
		5	5	6	10	96-127	LEDs ON
						128-159	Pulse Effect SLOW to FAST
						160-191	LEDs ON
						192-223	Random Strobe SLOW to FAST
						224-255	LED ON
	5	6	6	7	11		MASTER DIMMER INTENSITY
						0-255	Intensity 0 to 100%
	6	7	7	8	12		MASTER DIMMER INTENSITY FINE
						0-255	Dimmer Intensity FINE Adjustment
							COLOR TEMPERATURE
			8	9	13	0	OFF
						1-255	0% = 7,200K - 100% = 3,200K
							DIMMER CURVES
						0-20	STANDARD
						21-40	STAGE
				10	14	41-60	TV
						61-80	ARCHITECTURAL
						81-100	THRATRE
						101-255	DEFAULT to UNIT CURVE SETTING

CLEANING AND MAINTENANCE

C A U T I O N

Disconnect power before cleaning or maintenance.

CLEANING

Frequent cleaning is recommended to insure proper function, optimized light output, and an extended life. The frequency of cleaning depends on the environment in which the fixture operates: damp, smoky or particularly dirty environments can cause greater accumulation of dirt on the fixture's optics.

- Clean the external lens surface at least every 20 days with a soft cloth to avoid dirt/debris accumulation.
- Never use alcohol, solvents, or ammonia based cleaners.

MAINTENANCE

Regular inspections are recommended to insure proper function and extended life. There are no user serviceable parts inside this fixture, please refer all other service issues to an authorized Elation service technician. Should you need any spare parts, please order genuine parts from your local Elation dealer.

Please refer to the following points during routine inspections:

- A detailed check by an approved electrical engineer every three months, to make sure the circuit contacts are in good condition and prevent overheating.
- Ensure all screws and fasteners are securely tightened at all times. Lose screws may fall out during normal operation resulting in damage or injury as larger parts could fall.
- Check for any deformations on the housing, color lenses, rigging hardware and rigging points (ceiling, suspension, trussing). Deformations in the housing could allow for dust to enter into the fixture. Damaged rigging points or unsecured rigging could cause the fixture to fall and seriously injure a person(s).
- Electric power supply cables must not show any damage, material fatigue or sediments. Never remove the ground prong from the power cable.

TECHNICAL SPECIFICATIONS

SOURCE
150W COB RGBW LED
20,000 Hour Average Lamp Life*
*May vary depending on several factors including but not limited to:
Environmental Conditions, Power/Voltage, Usage Patterns (On-Off Cycling), Control, and Dimming.

EFFECTS
64 Internal Color Macros
Smooth Color Mixing and 16bit Dimming
Variable LED Refresh Rate Frequency
Variable LED Gamma Brightness
Selectable Dimming Curves and Electronic Strobe
Linear Variable White Color Temp Presets (7200K - 3200K)

COLOR
RGBW Color Mixing

CONTROL / CONNECTIONS
(6) DMX Channel Modes (4 / 6 / 7 / 8 / 10 / 14)
4 Button Control Panel
180° Reversible LCD Menu Display
5pin DMX In/Out
Locking power In/Out

SIZE / WEIGHT
Length: 16.7" (425mm)
Width: 14.3" (364mm)
Vertical Height: 16.5" (419mm)
Weight: 13.0 lbs. (5.9 kg)

ELECTRICAL / THERMAL
AC 100-240V - 50/60Hz
170W Max Power Consumption
Max Ambient Temperature 104°F (40°C)

APPROVALS / RATINGS
CE | cETLus | IP20

C US
Intertek
4000358

Please Note: Specifications and improvements in the design of this unit and this manual are subject to change without any prior written notice.

PHOTOMETRIC DATA

	1 m	3.3 ft	2 m	6.6 ft	3 m	9.8 ft	4 m	13.1 ft	5 m	16.4 ft
Beam Diameter	2x3	7x10	4x6	13x20	6x9	20x30	8x12	26x39	10x15	33x49
	lux	fc	lux	fc	lux	fc	lux	fc	lux	fc
FULL ON	3,536	328	970	90	400	37	221	21	145	13

DIMENSIONAL DRAWINGS

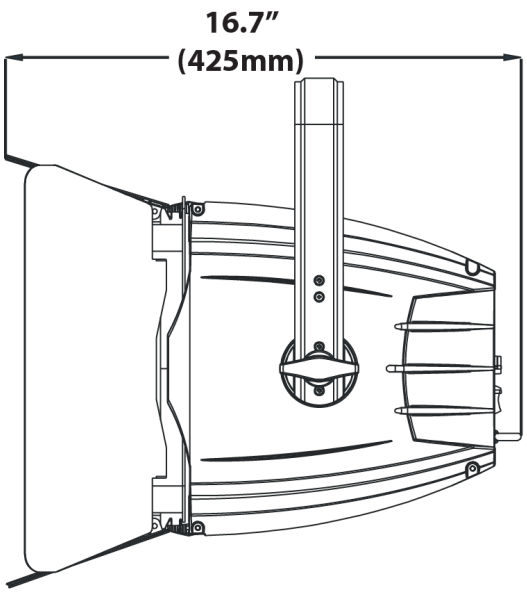

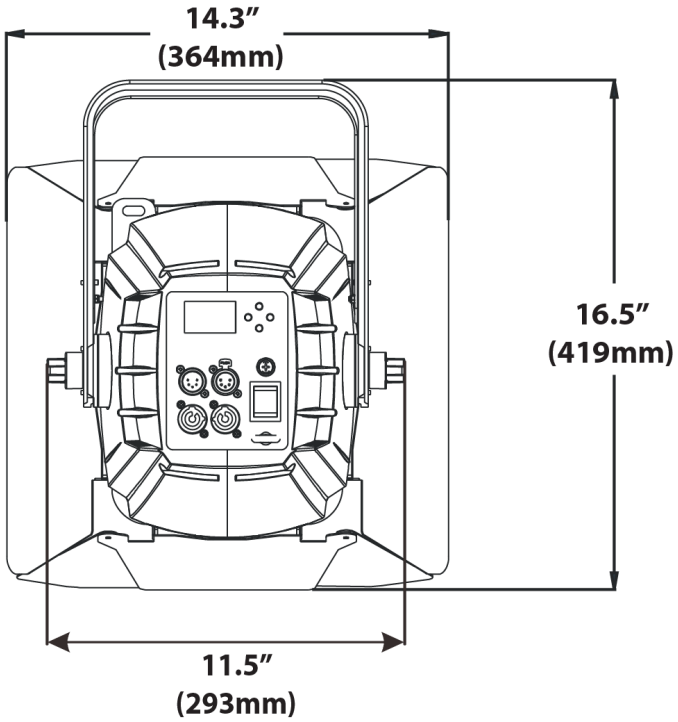

Please Note: Specifications and improvements in the design of this unit and this manual are subject to change without any prior written notice.

OPTIONAL ACCESSORIES

ORDER CODE	ITEM
NARROW CLAMP	Heavy Duty Wrap Around Clamp
AC5PDMX5PRO	5 ft. (1.5m) 5pin PRO DMX Cable
	Additional Cable Lengths Available